GENERAL NOTES:

USE THESE INSTRUCTIONS IN CONJUNCTION WITH INSTALLATION INSTRUCTIONS 425970, 425971, 425972 OR 425973.

GLAZING TEMPORARIES ARE NOT INCLUDED FOR REGLAZING CORNER CONDITIONS.

UNIT ASSEMBLY

SLIDE IN 127091 AND 127092 BULB GASKETS PER TYPICAL INSTALLATION INSTRUCTIONS.

LOCATE INTERLOCK CLIPS AT FRONT AND BACK OF FEMALE MULLION HALF AT 18" ON CENTER. CRIMP IN PLACE.

CRIMP NOTE

DURING ALL CRIMPING OPERATIONS, BEND EXTENDED LEG ONLY. PROVIDE SUPPORT ON OPPOSITE SIDE TO PREVENT CRAZING OF VISIBLE ANODIZED OR PAINTED SURFACES.

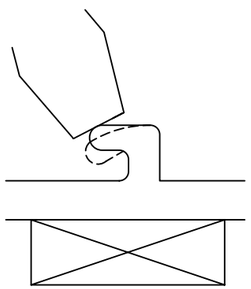

MATCH DRILL .159" DIA. (#21 DRILL) HOLES FOR A # 10 FASTENER IN MULLION OR ADAPTER FOR APPLICATION OF 1/4" ADAPTERS WHERE REQUIRED. APPLY ADAPTERS AND SEAL.

APPLY MULLION PLUGS AT BOTTOM OF OUTSIDE CORNER MULLION HALVES. SET IN SEALANT AND SEAL TOP, BOTTOM AND INSIDE FACES COMPLETELY. TOOL SEALANT FLAT AT INSIDE FACE TO CREATE A FLUSH SURFACE FOR HORIZONTAL STACK AIR SEAL GASKET.

APPLY SEALANT AT ENDS OF HORIZONTALS AND ASSEMBLE FRAMES USING CORNER FRAMING SCREWS 128510 #12 X 1 1/2" HWHTF AB WHICH ARE LONGER THAN THE TYPICAL FRAMING SCREWS 128509 #12 X 1" HWHTF AB.

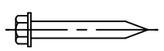

APPLY SEALANT IN GROOVE FROM BOTTOM OF MALE MULLION HALVES UP 4" AND TOOL FLUSH. REFERENCE TYPICAL INSTALLATION INSTRUCTIONS.

SNAP IN P.E. COVERS AT SSG MULLIONS WHERE REQUIRED. PARTS RUN MULLION LENGTH. P.E. COVERS ARE ONLY REQUIRED WHEN THE PRESSURE EQUALIZATION OPTION IS USED.

90° CAPTURED OUTSIDE CORNER

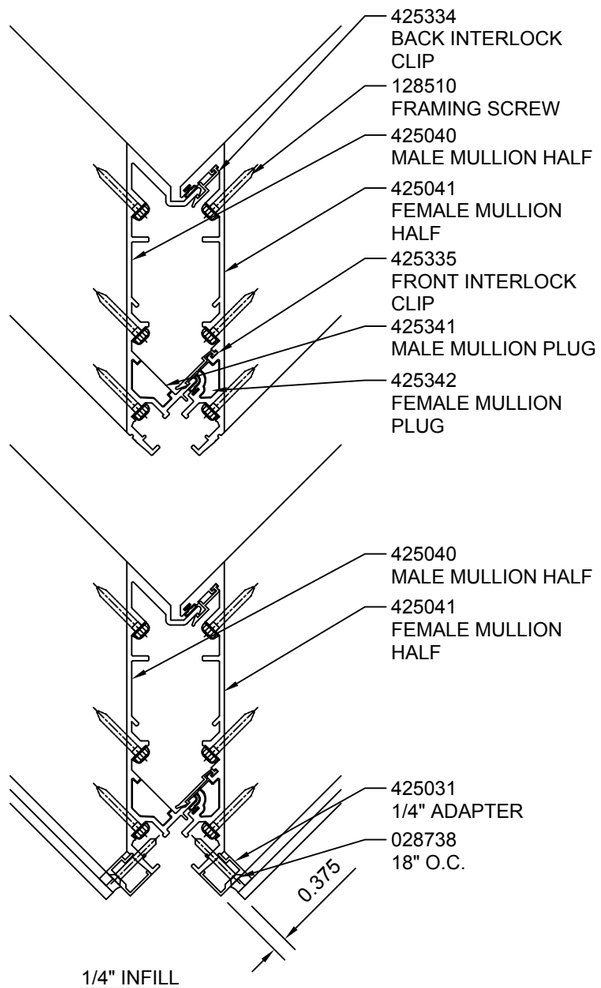

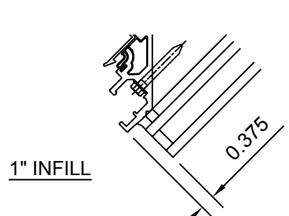

90° SSG OUTSIDE CORNER

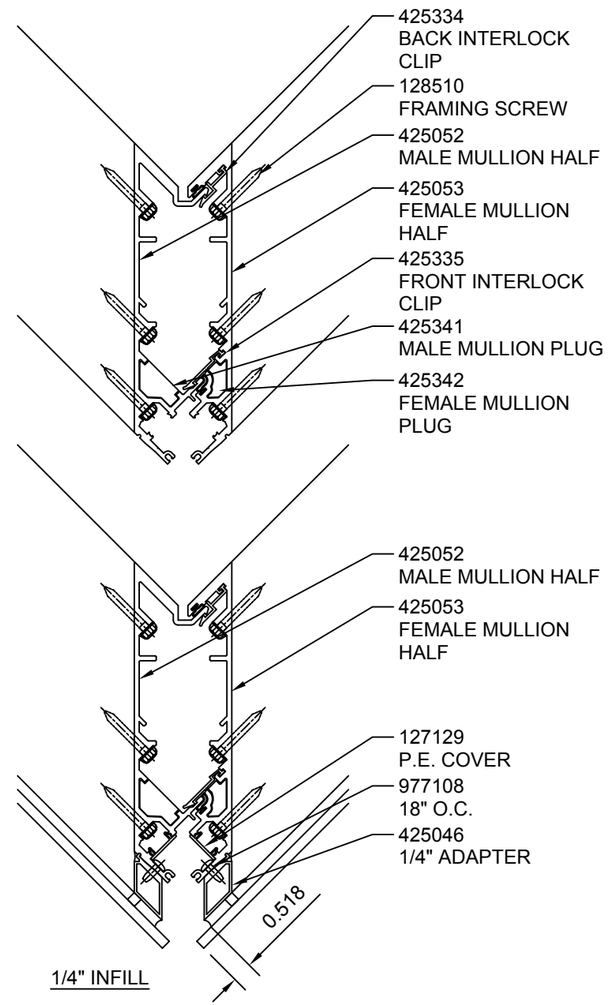

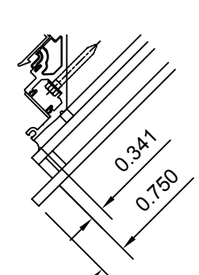

425974 (SHEET 01 OF 05)

CONFIDENTIAL AND PROPRIETARY INFORMATION
KAWNEER COMPANY INC.

THESE DRAWINGS ARE THE SOLE AND EXCLUSIVE PROPERTY OF KAWNEER AND CONTAIN SENSITIVE, PRIVILEGED OR CONFIDENTIAL INFORMATION WHICH MAY BE USED ONLY FOR ITS BENEFIT. THE DISCLOSURE OF THESE DRAWINGS TO UNAUTHORIZED PERSONS IS STRICTLY PROHIBITED. THIS DOCUMENT AND ALL COPIES MUST BE RETURNED UPON DEMAND.
© COPYRIGHT KAWNEER COMPANY, INC., 2007

90° SSG INSIDE CORNER

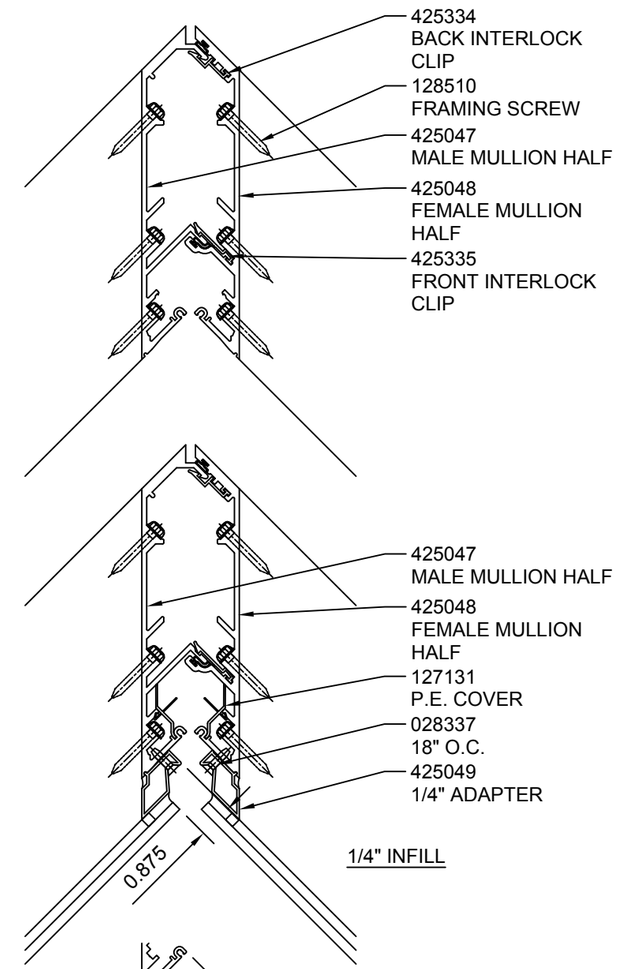

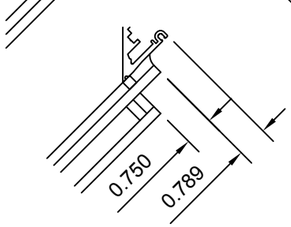

KAWNEER

Product Engineering & Development

2500 PG WALL CORNER INSTALLATION INSTRUCTIONS

95500-010
06/21/13

425974 (SHEET 01 OF 05)

USE THESE INSTRUCTIONS IN CONJUNCTION WITH INSTALLATION INSTRUCTIONS 425970, 425971, 425972 OR 425973.

UNIT ASSEMBLY CONTINUED

INSTALL GLASS

REFERENCE TYPICAL INSTALLATION INSTRUCTIONS.

AT SSG STACK HORIZONTALS, MITER THE 425328 ISOLATOR AT OUTSIDE CORNERS. AT INSIDE CORNERS, PART CAN BE MITERED OR SQUARE CUT. PART LENGTH IN BOTH CASES IS TO BE HORIZONTAL LENGTH (AT ISOLATOR LOCATION) MINUS 1/16" AT EACH END.

425328

INSTALL CORNER JOINT PLUGS AND THERMAL SEPARATOR

USE STANDARD JOINT PLUGS FOR CAPTURED CORNERS.
USE 425339 ALUMINUM JOINT PLUGS AT SSG CORNERS WITH 1" INFILL.
USE 425340 ALUMINUM JOINT PLUGS AT SSG CORNERS WITH 1/4" INFILL.

FOR ALUMINUM JOINT PLUGS AT SSG VERTICALS, APPLY SEALANT ALONG END OF HORIZONTAL TONGUE AND FACE OF MULLION. SET JOINT PLUGS IN SEALANT AND APPLY HORIZONTAL THERMAL SEPARATOR 162310 IN HORIZONTAL TONGUE. SPAN THERMAL SEPARATOR ACROSS JOINT PLUG TO HOLD IN PLACE. STOP THERMAL SEPARATOR SHORT 1/4" FROM END OF JOINT PLUG AT OUTSIDE CORNER SSG MULLIONS. TOOL SEALANT.

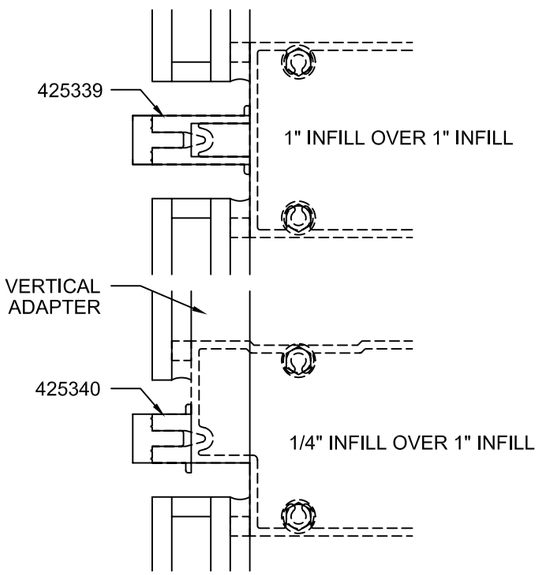

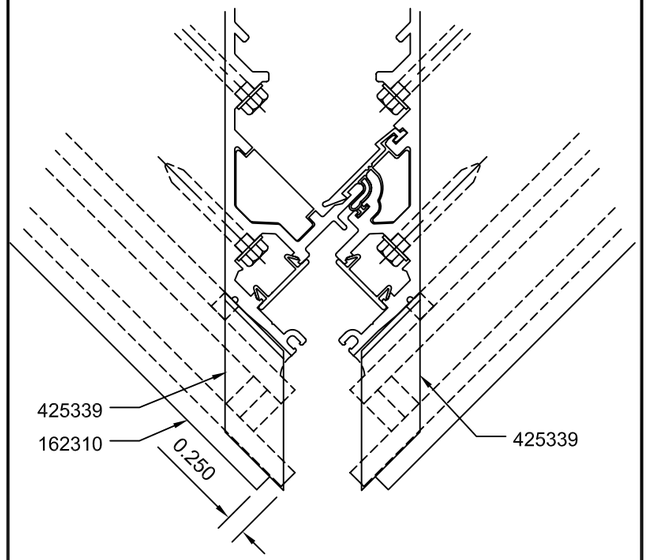

SSG 90° OUTSIDE CORNER
1" INFILL

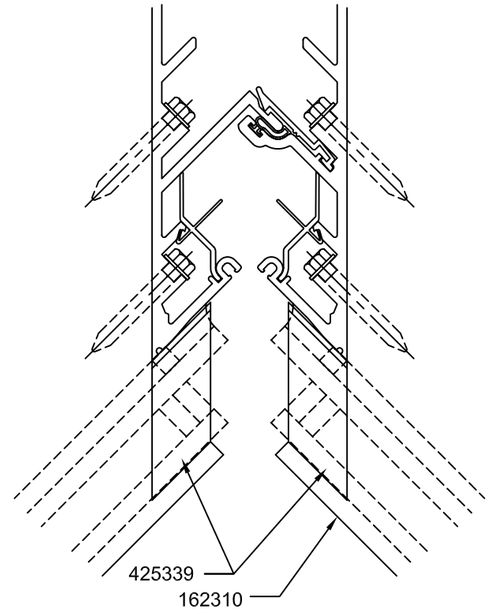

SSG 90° INSIDE CORNER
1" INFILL

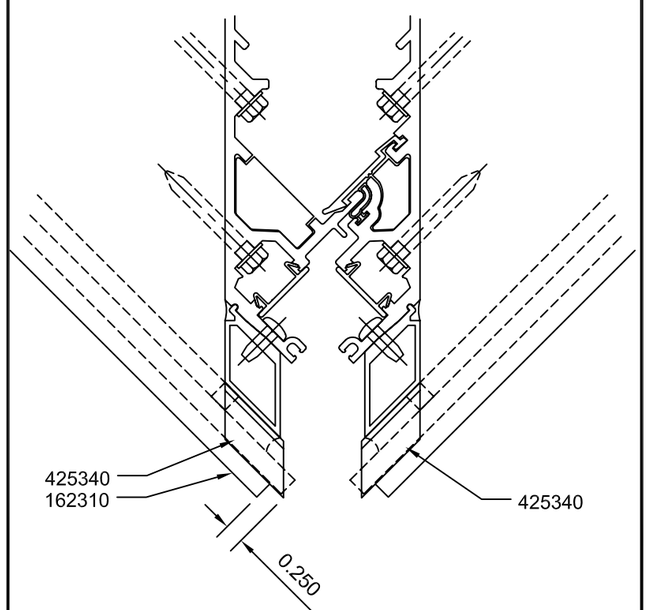

SSG 90° OUTSIDE CORNER
1/4" INFILL

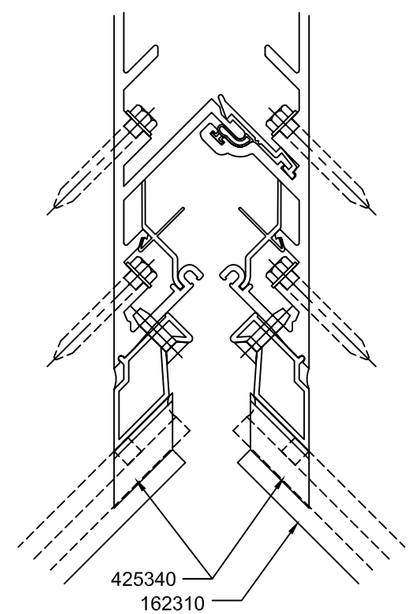

SSG 90° INSIDE CORNER
1/4" INFILL

CONFIDENTIAL AND PROPRIETARY INFORMATION
KAWNEER COMPANY INC.
THESE DRAWINGS ARE THE SOLE AND EXCLUSIVE PROPERTY OF KAWNEER AND CONTAIN SENSITIVE, PRIVILEGED OR CONFIDENTIAL INFORMATION WHICH MAY BE USED ONLY FOR ITS BENEFIT. THE DISCLOSURE OF THESE DRAWINGS TO UNAUTHORIZED PERSONS IS STRICTLY PROHIBITED. THIS DOCUMENT AND ALL COPIES MUST BE RETURNED UPON DEMAND.
© COPYRIGHT KAWNEER COMPANY, INC., 2007

INSTALL EDGE PROTECTOR AT TOP OF UNIT. AT SSG VERTICALS, MITER END AND STOP 1/16" FROM END OF HORIZONTAL. AT CAPTURED OUTSIDE CORNER WITH 1" INFILL, MITER 425327 AND CUT OFF CORNER TO CLEAR VERTICAL ADAPTER. AT CAPTURED OUTSIDE CORNER WITH 1/4" INFILL, 425326 EDGE PROTECTOR IS SQUARE CUT. APPLY BACKER ROD AND SEAL. REFERENCE TYPICAL INSTALLATION INSTRUCTIONS.

AT CAPTURED CORNER VERTICALS, INSTALL 425329 VERTICAL ISOLATOR, 425044 CORNER GLASS RETAINER, 127086 HINGED RAINSCREEN GASKET AND 2" 027851 WEDGE GASKET TEMPORARIES. REFERENCE TYPICAL INSTALLATION INSTRUCTIONS.

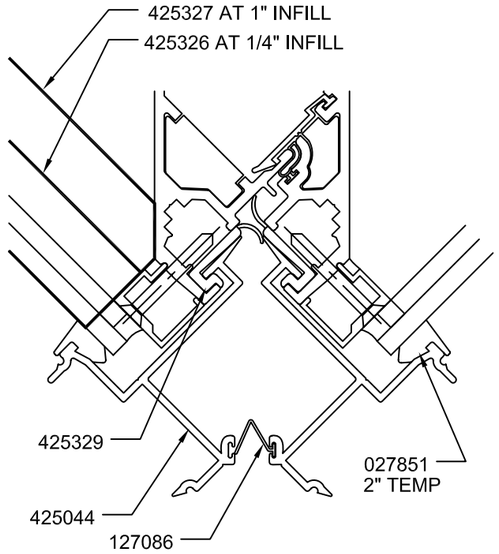

KAWNEER
Product Engineering & Development

2500 PG WALL CORNER INSTALLATION INSTRUCTIONS

95500-03
01/26/07

USE THESE INSTRUCTIONS IN CONJUNCTION WITH INSTALLATION INSTRUCTIONS 425970, 425971, 425972 OR 425973.

UNIT ASSEMBLY CONTINUED

INSTALL 127087 STACK RAINSCREEN GASKET

REFERENCE TYPICAL INSTALLATION INSTRUCTIONS.

AT OUTSIDE CORNER VERTICALS, COLLAPSE GASKET COMPLETELY AND MITER. PART LENGTH AT LONG POINT TO BE 3/16" SHORT OF GLASS WORKING POINT. AT INSIDE CORNER VERTICALS, DO NOT COLLAPSE GASKET WHILE MITERING PART. PART LENGTH AT LONG POINT (BACK OF PART) TO BE 3/4" BEYOND GLASS WORKING POINT.

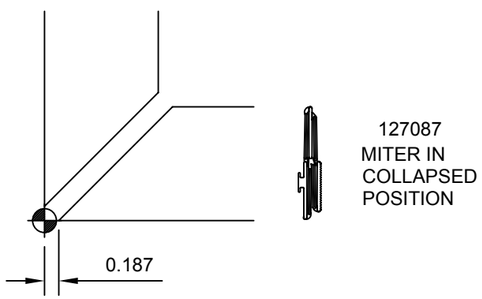

OUTSIDE CORNER

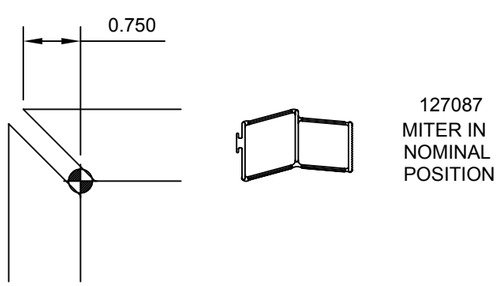

INSIDE CORNER

INSTALL CORNER JOINT PLUG SEALS

JUST PRIOR TO INSTALLING VERTICAL RAINSCREEN GASKETS AND HORIZONTAL PRESSURE PLATES, SEAL ENDS OF HORIZONTALS AT SSG VERTICAL ALUMINUM JOINT PLUGS. SEAL END OF HORIZONTAL FROM BOTTOM OF UPPER LITE TO THE TOP OF THE LOWER LITE. APPLY BACKER ROD IN GLAZING POCKETS AND SEAL ENDS COMPLETELY LEAVING A 5/16" DIA. VENT HOLE AT THE TOP OF THE LOWER LITE AS SHOWN. SEALANT MUST EXTEND OUT TO THE FACE OF THE THERMAL SEPARATOR.

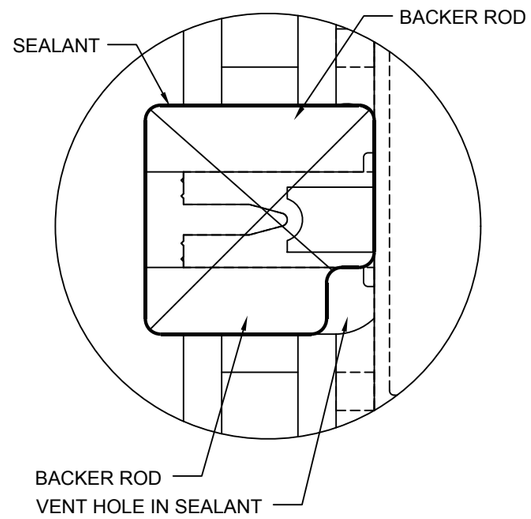

1" INFILL OVER 1" INFILL

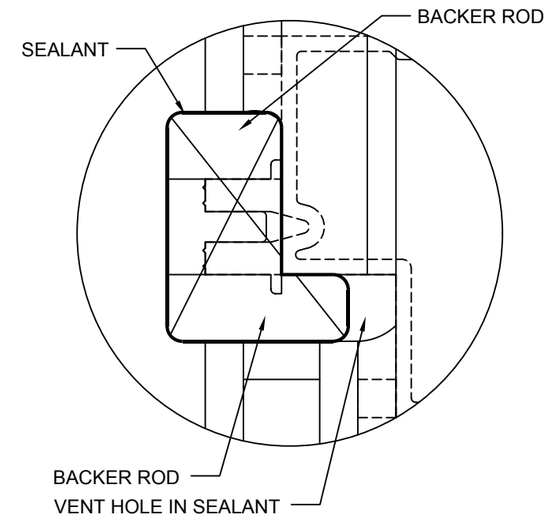

1/4" INFILL OVER 1" INFILL

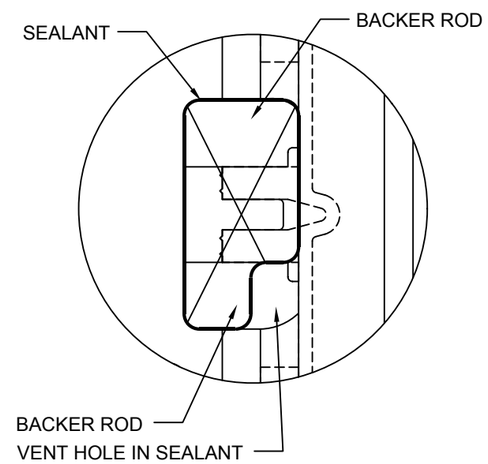

1/4" INFILL OVER 1/4" INFILL

CONFIDENTIAL AND PROPRIETARY INFORMATION
KAWNEER COMPANY INC.
THESE DRAWINGS ARE THE SOLE AND EXCLUSIVE PROPERTY OF KAWNEER AND CONTAIN SENSITIVE, PRIVILEGED OR CONFIDENTIAL INFORMATION WHICH MAY BE USED ONLY FOR ITS BENEFIT. THE DISCLOSURE OF THESE DRAWINGS TO UNAUTHORIZED PERSONS IS STRICTLY PROHIBITED. THIS DOCUMENT AND ALL COPIES MUST BE RETURNED UPON DEMAND.
© COPYRIGHT KAWNEER COMPANY, INC., 2007

INSTALL RAINSCREEN GASKETS

APPLY 127128 RAINSCREEN GASKET AT OUTSIDE CORNERS.
APPLY 127130 RAINSCREEN GASKET AT INSIDE CORNERS.

GASKETS RUN MULLION LENGTH - 3/16" AT THE BOTTOM. PUSH IN GASKET DART INTO REGLET. GASKET LEG AT EXTERIOR SHOULD OVERLAP FACE OF GLASS.

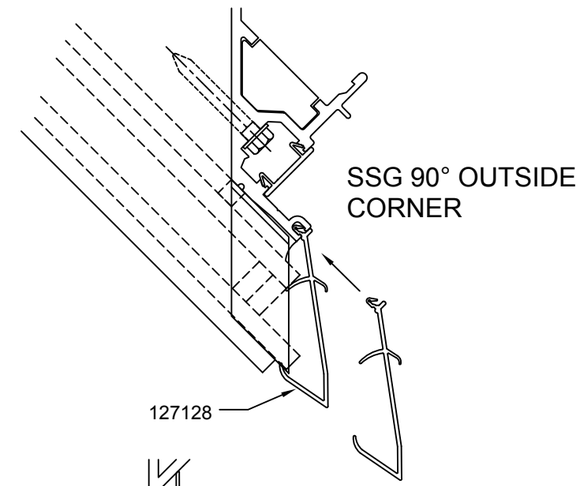

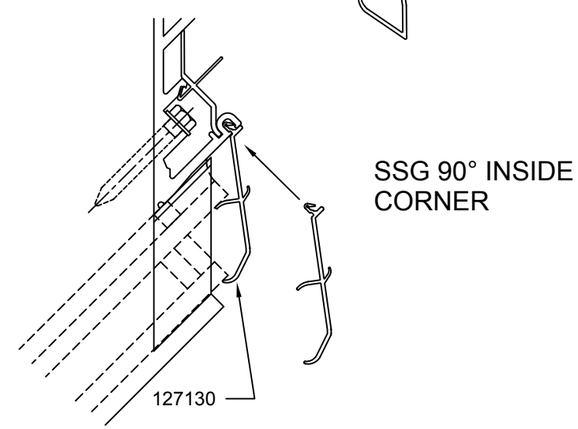

KAWNEER Product Engineering & Development	2500 PG WALL CORNER INSTALLATION INSTRUCTIONS
95500-09 09/16/11	425974 (SHEET 03 OF 05)

USE THESE INSTRUCTIONS IN CONJUNCTION WITH INSTALLATION INSTRUCTIONS 425970, 425971, 425972 OR 425973.

UNIT ASSEMBLY CONTINUED

INSTALL HORIZONTAL PRESSURE PLATES AND EXTERIOR GASKETS

REFERENCE TYPICAL INSTALLATION INSTRUCTIONS.

AT SSG STACK HORIZONTALS, SQUARE CUT THE 127089 HORIZONTAL RAINSCREEN GASKET AT OUTSIDE CORNERS. PART LENGTH TO STOP AT END OF PRESSURE PLATE AT THE CORNER END. AT INSIDE CORNERS, PART IS TO BE MITERED. PART LENGTH TO BE SHORT OF GLASS WORKING POINT BY 5/16" AND EXTEND 13/16" BEYOND END OF PRESSURE PLATE AT THE CORNER END.

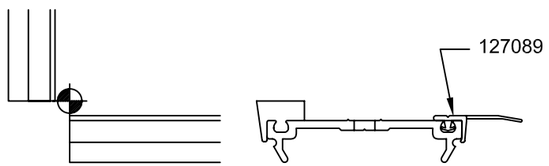

OUTSIDE CORNER

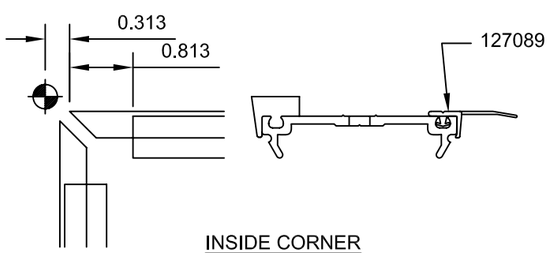

INSIDE CORNER

INSTALL HORIZONTAL PRESSURE PLATES AND EXTERIOR GASKETS CONTINUED

REFERENCE TYPICAL INSTALLATION INSTRUCTIONS.

AT HORIZONTALS, MITER CUT THE 027850 EXTERIOR FIXED GASKET AT OUTSIDE CORNERS. PART LENGTH TO EXTEND 7/16" BEYOND END OF PRESSURE PLATE AT THE CORNER END. AT INSIDE CORNERS, PART IS TO BE MITER CUT. PART LENGTH TO BE SHORT OF GLASS WORKING POINT BY 1/8" AND EXTEND 1" BEYOND END OF PRESSURE PLATE AT THE CORNER END.

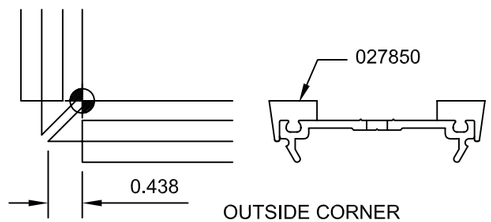

OUTSIDE CORNER

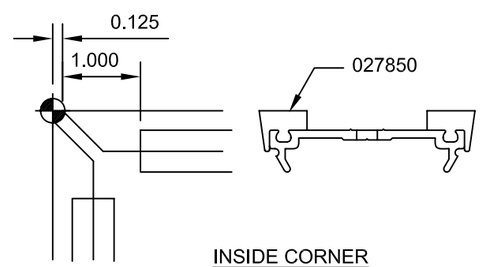

INSIDE CORNER

APPLY VERTICAL WEDGE GASKET

AT CAPTURED VERTICALS, PUSH IN 027851 WEDGE GASKET. REFERENCE TYPICAL INSTALLATION INSTRUCTIONS.

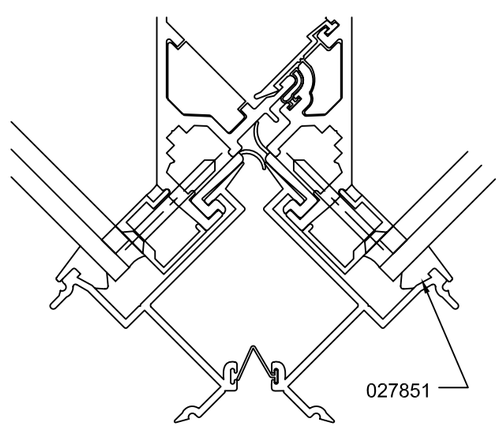

INSTALL HORIZONTAL AND VERTICAL COVERS

REFERENCE TYPICAL INSTALLATION INSTRUCTIONS.

AT CAPTURED VERTICALS, SNAP ON 425045 COVERS.

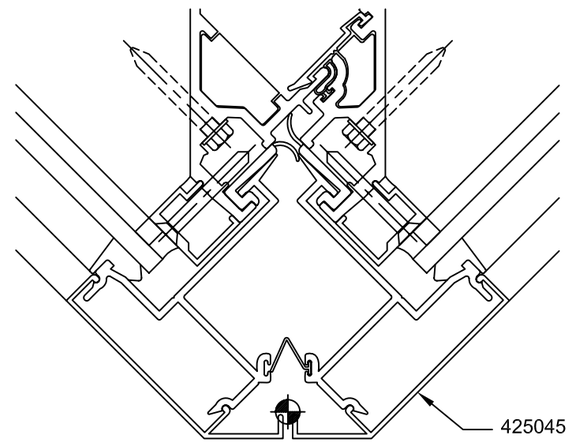

CAPTURED OUTSIDE CORNER

AT HORIZONTALS, SNAP ON 162006 COVERS.

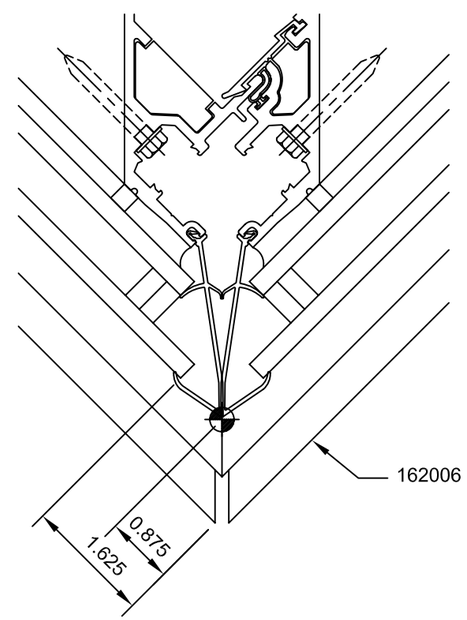

SSG OUTSIDE CORNER

CONFIDENTIAL AND PROPRIETARY INFORMATION
KAWNEER COMPANY INC.
THESE DRAWINGS ARE THE SOLE AND EXCLUSIVE PROPERTY OF KAWNEER AND CONTAIN SENSITIVE, PRIVILEGED OR CONFIDENTIAL INFORMATION WHICH MAY BE USED ONLY FOR ITS BENEFIT. THE DISCLOSURE OF THESE DRAWINGS TO UNAUTHORIZED PERSONS IS STRICTLY PROHIBITED. THIS DOCUMENT AND ALL COPIES MUST BE RETURNED UPON DEMAND.
© COPYRIGHT KAWNEER COMPANY, INC., 2007

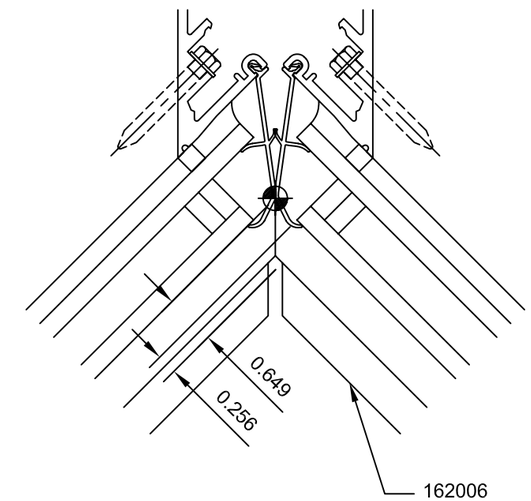

SSG INSIDE CORNER

INSTALL ANCHOR LUGS

REFERENCE TYPICAL INSTALLATION INSTRUCTIONS AND SHOP DRAWINGS.

425353 BENT STEEL ANGLE IS REQUIRED ON BOTH SIDES OF THE OUTSIDE CORNER MULLION. ATTACH WITH BOLTS, FLAT WASHERS, LOCK WASHERS AND NUTS PER SHOP DRAWINGS. APPLY 027-477 SEPARATOR BETWEEN MULLION AND ANGLE. ALSO ATTACH 425352 CORNER ANCHOR LUGS TO 425353. USE TYPICAL ANCHOR LUG ASSEMBLY AT INSIDE CORNERS.

INSTALL REINFORCEMENT ANGLES

REFERENCE TYPICAL INSTALLATION INSTRUCTIONS AND SHOP DRAWINGS.

A MITERED REINFORCEMENT ANGLE IS REQUIRED ON BOTH SIDES OF THE CORNER MULLION. USE 425338 AT OUTSIDE CORNERS AND 425345 AT INSIDE CORNERS FOR HOISTING CORNER UNITS.

KAWNEER	2500 PG WALL CORNER INSTALLATION INSTRUCTIONS
Product Engineering & Development	
95500-05 05/01/07	425974 (SHEET 04 OF 05)

CONFIDENTIAL AND PROPRIETARY INFORMATION
KAWNEER COMPANY INC.
THESE DRAWINGS ARE THE SOLE AND EXCLUSIVE PROPERTY OF KAWNEER AND CONTAIN SENSITIVE, PRIVILEGED OR CONFIDENTIAL INFORMATION WHICH MAY BE USED ONLY FOR ITS BENEFIT. THE DISCLOSURE OF THESE DRAWINGS TO UNAUTHORIZED PERSONS IS STRICTLY PROHIBITED. THIS DOCUMENT AND ALL COPIES MUST BE RETURNED UPON DEMAND.
© COPYRIGHT KAWNEER COMPANY, INC., 2007

USE THESE INSTRUCTIONS IN CONJUNCTION WITH INSTALLATION INSTRUCTIONS 425970, 425971, 425972 OR 425973.

CURTAIN WALL UNIT INSTALLATION

REFERENCE TYPICAL INSTALLATION INSTRUCTIONS.

WHEN INSTALLING 2ND CORNER UNIT, MAKE SURE CORNER MULLION HALVES AND ANTI-BUCKLING CLIPS ARE ALIGNED PRIOR TO SNAPPING UNITS TOGETHER.

AT SSG STACK HORIZONTALS. CAP MULLION USING TWO MITERED PARTS. REFERENCE DETAILS ON THIS PAGE. THE SAME TWO CAPS ARE USED FOR ALL OUTSIDE AND INSIDE CORNERS. SET IN SEALANT AND SEAL ALL JOINTS.

ONCE CAPS ARE INSTALLED, SLIDE BOTH REINFORCING ANGLES TOGETHER IN THE CORNER. SEE TYPICAL INSTALLATION INSTRUCTIONS FOR ADDITIONAL INFORMATION.

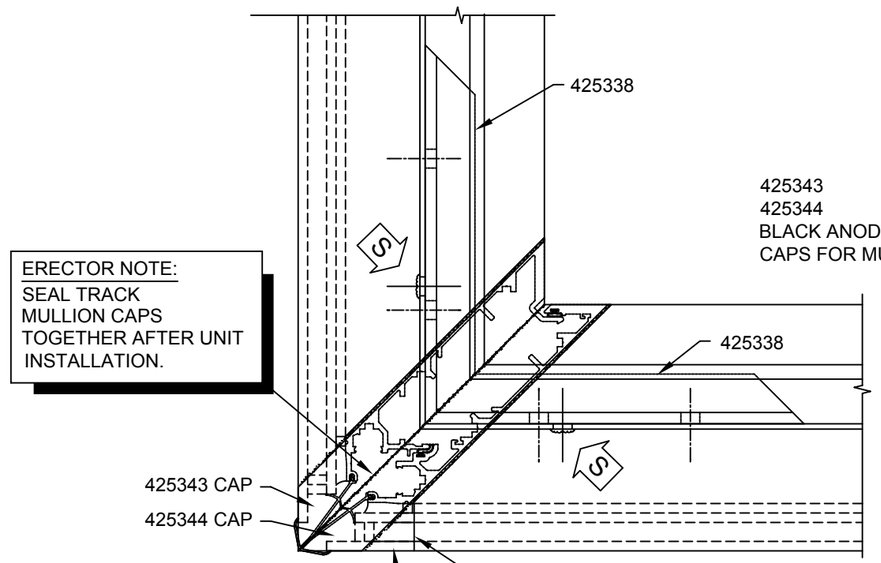

SSG 90° OUTSIDE CORNER SHOWN
CAPTURED 90° OUTSIDE CORNER SIMILAR

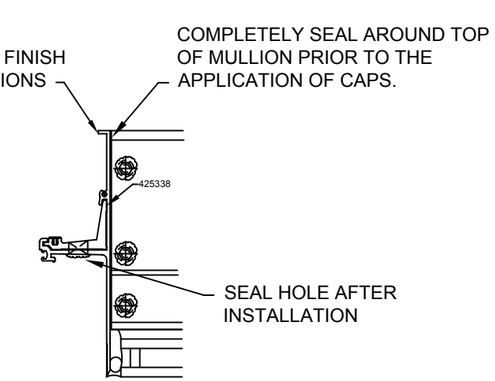

SECTION AT CAP

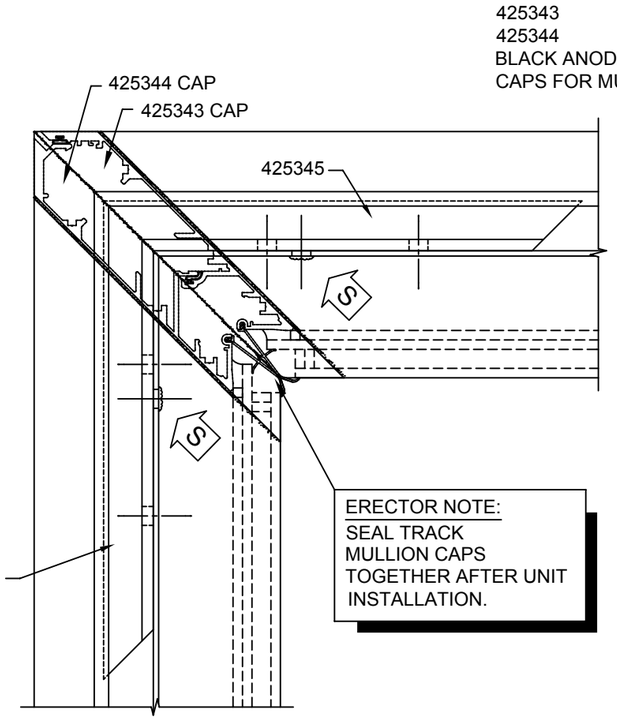

SSG 90 INSIDE CORNER

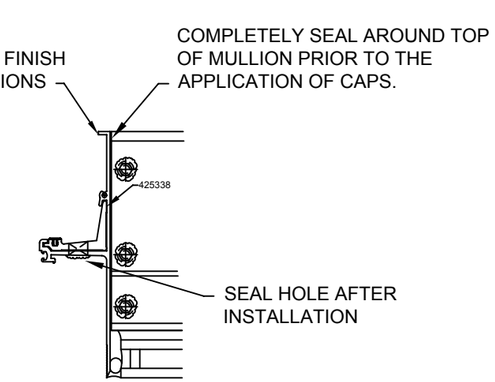

SECTION AT CAP

KAWNEER	2500 PG WALL CORNER INSTALLATION INSTRUCTIONS
Product Engineering & Development	
95500-06 04/11/08	425974 (SHEET 05 OF 05)